ECN0063527

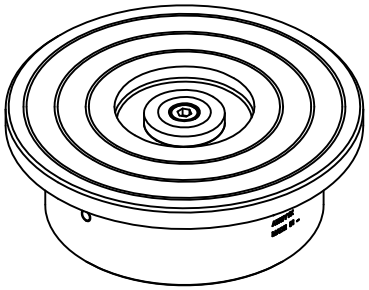

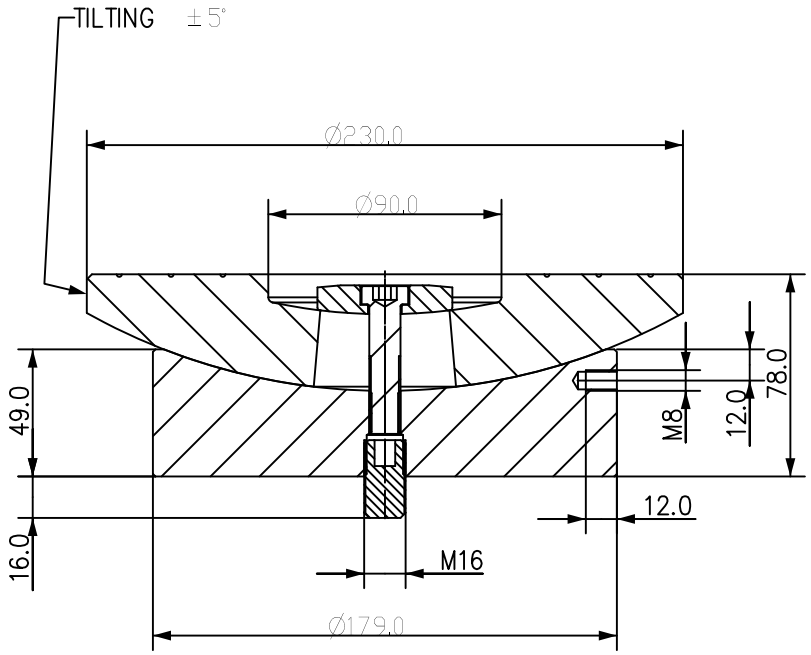

MAX CAPACITY: 5114 kN
WEIGHT :17.0 KG

Language Code – Primary/Secondary: eng/ENG	Document Type: Drawing	Description: CATS TILTING SADDLE 500TON CATS500			
FIRST ANGLE PROJECTION	Technical Reference: Juan Carlos Gomez				
DO NOT SCALE DRAWING	Approver: Juan Carlos Gomez	Rev: C	Date of Issue: 2019OCT30	CATS500ID	Sheet: 1/1
Per ASME Y14.5 – 2009	Creator: Gonzalez, Jorge	This print and information herein is confidential and proprietary and is the property of ENERPAC. It is not to be copied or reproduced without written permission.	ENERPAC		

A4